INSTALLATION AND OPERATING INSTRUCTIONS

OWNERS MANUAL

MODEL 6200
LOW VOLTAGE CONTROL CHAIR

RELIANCE INTERNATIONAL

SERIAL NUMBER

For your future reference, mark the serial number in the space provided.

QUALITY MANAGEMENT
SYSTEM
REGISTERED TO
ISO 9001:2008
ISO 13485:2003

RELIANCE
INTERNATIONAL
MADE IN AMERICA

Reliance® Medical Products • 3535 Kings Mills Road • Mason, Ohio 45040-2303 • 1-800-735-0357 • www.reliance-medical.com

TABLE OF CONTENTS

IMPORTANT INFORMATION.....4

1. INTRODUCTION.....5

TECHNICAL SPECIFICATIONS.....6

2. INSTALLATION.....7

2.1. Unpacking.....7

Chair.....7

2.2. Assembly.....7

Headrest.....7

Power Receptacle.....7

3. OPERATION.....7

3.1. Stop Switch.....7

3.2. Chair Lift.....8

Raising & Lowering the Chair Lift from the Footswitch.....8

3.3. Chair Top.....9

Posistioning the Chair Back.....9

3.4. Revolving/Rotation.....9

3.5. Arm Movement.....9

3.6. Footrest.....10

3.7. Headrest.....10

Operation-No. 18, 22 Headrest.....10

Adjustment-No. 18, 22 Headrest.....10

Operation-No. 10 Headrest.....10

Operation-No. 11, 21 Headrest.....10

Adjustment-No. 11, 21 Headrest.....11

4. LOCATING AND REPLACING FUSES.....11

4.1. Fuse Replacement.....11

TROUBLESHOOTING GUIDE.....12

CLEANING AND MAINTENANCE.....13

PARTS LIST.....14

Model 6200 Chair Assembly.....15

Chair Top Assembly.....16

Chair Base Assembly.....20

Lift Assembly.....22

#18, 22 Headrest Assembly.....24

#10 Headrest Assembly.....26

#11 Headrest Assembly.....28

#21 Headrest Assembly.....30

Wiring Diagram - 6200.....32

LIMITED WARRANTY.....35

IMPORTANT INFORMATION

SAFETY SYMBOLS

"DANGER", "WARNING", or "CAUTION"
The exclamation point within an equilateral triangle is intended to alert the user to the presence of important operating and maintenance (servicing) instructions in this Installation and Operating Instructions.

« DANGER », « AVERTISSEMENT », ou «PRÉCAUTION »
Le point d'exclamation à l'intérieur d'un triangle équilatéral vise à alerter l'utilisateur à la présence d'importantes instructions de fonctionnement et de maintenance (service) dans ce manuel d'installation et d'instructions de fonctionnement.

"NOTE"
Amplifies a procedure, practice, or condition.

"NOTE"
Amplifie une procédure, pratique ou condition.

Type B, Applied Part

Dangerous Voltage / Shock Hazard

Fuse Rating Specification

Protective Earth Ground

Alternating Current-AC

Safe Working Load

"Attention, Consult Accompanying Documents"

TRANSPORTATION / STORAGE CONDITIONS

Temperature:	Operating:	59 to 104º F 15 to 40º C
	Storage:	-22 to +140º F -30 to +60º C
Relative Humidity:		Operating: 5%RH to 95%RH without condensation Storage: 10%RH to 100%RH, including condensation
Atmospheric Pressure:		Operating: 700hPa - 1060hPa Storage: 500hPa - 1060hPa

1. INTRODUCTION

1.1. This manual contains information applicable only to the Reliance® Model 6200 Chair.

1.2. Whenever you see the symbols shown below, heed their instructions! Always follow safe operating and maintenance practices.

"DANGER"- THE DANGER SYMBOL IDENTIFIES SPECIAL INSTRUCTIONS OR PROCEDURES WHICH, IF NOT CORRECTLY FOLLOWED, COULD RESULT IN LOSS OF LIFE OR PERSONAL INJURY.

« DANGER » : LE SYMBOLE DANGER IDENTIFIE DES INSTRUCTIONS OU PROCÉDURES SPÉCIALES QUI, SI ELLES NE SONT PAS SUIVIES CORRECTEMENT, POURRAIENT CAUSER UNE PERTE DE VIE OU UNE BLESSURE.

"WARNING"- THE WARNING SYMBOL IDENTIFIES SPECIAL INSTRUCTIONS OR PROCEDURES WHICH, IF NOT CORRECTLY FOLLOWED, COULD RESULT IN PERSONAL INJURY.

« AVERTISSEMENT » : LE SYMBOLE AVERTISSEMENT IDENTIFIE DES INSTRUCTIONS OU PROCÉDURES SPÉCIALES QUI, SI ELLES NE SONT PAS SUIVIES CORRECTEMENT, POURRAIENT CAUSER UNE BLESSURE.

"CAUTION"- This caution symbol identifies special instructions or procedures which, if not strictly observed, could result in damage to or destruction of equipment.

« PRÉCAUTION » : Ce symbole de précaution identifie des instructions ou procédures spéciales qui, si elles ne sont pas strictement suivies, pourraient causer un dommage ou la destruction de l'équipement.

"NOTE"- Note indicates points of particular or additional information.

« REMARQUE » : Remarque indique des points d'intérêt particulier ou des renseignements additionnels. la note indique des remarques d'information particulière ou supplémentaire.

1.3. Should your product not perform properly, or if you have any questions concerning the use and care of any Reliance® product, contact the Reliance® Distributor, where you purchased this product or contact the Technical Service Department, Reliance® Medical Products, Inc., 3535 Kings Mills Road, Mason, Ohio 45040-2303, or call (800) 735-0358.

NOTE: Always have the model number and serial number available before contacting Reliance® or your Authorized Reliance® Distributor.

REMARQUE : Ayez toujours le numéro de modèle et le numéro de série à portée de la main avant de contacter Reliance® ou votre distributeur Reliance® autorisé.

"CLASSIFIED BY CANADIAN STANDARDS ASSOCIATION® WITH RESPECT TO ELECTRIC SHOCK, FIRE AND MECHANICAL HAZARDS ONLY IN ACCORDANCE WITH UL 60601-1."

According to Clause 5 in IEC 60601-1, sec 6.8.1, this unit is classified by the following:

- The type of protection against electric shock: EQUIPMENT energized from an external electrical power source: CLASS I EQUIPMENT
- The degree of protection against electric shock: TYPE B EQUIPMENT
- The degree of protection against harmful ingress of water: ORDINARY DEGREE
- The degree of safety of application in the presence of a FLAMMABLE ANAESTHETIC MIXTURE WITH AIR or WITH OXYGEN OR NITROUS OXIDE: EQUIPMENT not suitable for use in the presence of a FLAMMABLE ANAESTHETIC MIXTURE WITH AIR or WITH OXYGEN OR NITROUS OXIDE
- The mode of operation: CONTINUOUS OPERATION

WARNING: TO PREVENT FIRE OR ELECTRICAL SHOCK HAZARD, DO NOT EXPOSE THIS EQUIPMENT TO RAIN OR MOISTURE.

AVERTISSEMENT : POUR ÉVITER UN INCENDIE OU UN RISQUE DE CHOC ÉLECTRIQUE, N'EXPOSEZ PAS CET ÉQUIPEMENT À LA PLUIE OU À L'HUMIDITÉ.

TECHNICAL SPECIFICATIONS

Rating for 120V Low Voltage Chair

This equipment is rated Class I, Type B

Equipment	Model
Low Voltage Chair	6200

Volts	Hertz	Amps
120V	50/60	8.0
Class I	Type B	

CSA 22.2
NO. 601.1
UL 60601-1

Rating for 230V Low Voltage Chair

This equipment is rated Class I, Type B

Equipment	Model
Low Voltage Chair	6200

Volts	Hertz	Amps
230V	50	3.0
Class I	Type B	

CSA 22.2
NO. 601.1
UL 60601-1

U.S. Patent No.

3,661,421
3,792,905
5,467,002

IMPORTANT USER WARNINGS

WARNING: EXPLOSION HAZARD. THIS EQUIPMENT MUST NOT BE USED IN THE PRESENCE OF FLAMMABLE ANESTHETICS.

AVERTISSEMENT : RISQUE D'EXPLOSION. CET ÉQUIPEMENT NE DOIT PAS ÊTRE UTILISÉ EN PRÉSENCE D'ANESTHÉSIQUES INFLAMMABLES.

POTENTIAL ELECTROMAGNETIC or OTHER INTERFERENCE

This equipment generates, uses and can radiate radio frequency energy and, if not installed and used in accordance with the instructions, may cause harmful interference to other devices in the vicinity. However, there is no guarantee that interference will not occur in a particular installation.

If this equipment does cause harmful interference to other devices, which can be determined by turning the equipment off and on, the user is encouraged to try to correct the interference by one or more of the following measures:

- Reorient or relocate the receiving device.
- Increase the separation between the equipment.
- Connect the equipment into an outlet on a circuit different from that to which the other device(s) are connected.
- Consult the manufacturer or field service technician for help.

WARNING - STORAGE OF THIS EQUIPMENT BELOW 40°F (4.4°C) WILL CAUSE THE HYDRAULIC OIL TO BECOME THICK. THIS MAY CAUSE UNUSUAL NOISES WHEN THE BASE MOTOR IS OPERATED. IT IS RECOMMENDED THAT THE EQUIPMENT STAY AT A TEMPERATURE OF 60°F (15.6°C) OR ABOVE FOR AT LEAST 8 HOURS BEFORE OPERATING.

AVERTISSEMENT : L'ENTREPOSAGE DE CET ÉQUIPEMENT À MOINS DE 4,4°C (40°F) FERA EN SORTE QUE L'HUILE HYDRAULIQUE DEVIENDRA ÉPAISSE. CECI POURRAIT CAUSER DES BRUITS INHABITUELS LORSQUE LE MOTEUR DE LA BASE FONCTIONNE. ON RECOMMANDE QUE L'ÉQUIPEMENT DEMEURE À UNE TEMPÉRATURE DE 15,6°C (60°F) OU PLUS DURANT AU MOINS 8 HEURES AVANT DE L'UTILISER.

2. INSTALLATION

2.1. Unpacking

2.1.1. Chair

2.1.1.1. Cut the shipping bands, open the top of the shipping carton, and remove all packing material and boxes that can be easily reached. Remove (4) nuts and remove both base clamping boards.

2.1.1.2. It is recommended that the skid be positioned as close as possible to the desired chair location.

2.1.1.3. Remove at least two small shipping blocks stapled to the top of the skid. The chair can now be slid and/or tipped from the skid onto the floor.

2.1.1.4. Do not lift the chair by the upper structure. However, the chair may be tipped or slid into position by pushing or pulling on the upper structure.

2.1.1.5. With the chair in positon, remove all remaining paper pads, plastic, tape, strings, etc.

2.2. Assembly

2.2.1. Headrest

2.2.1.1. Remove the headrest from its carton, and mount it into position onto the chair back. Using the proper hex key wrench, tighten the cap screw to clamp the headrest securely into its mounting bracket.

2.2.2. Power Receptacle

2.2.2.1. Locate the footswitch assembly, chair control cable, and the power cord assembly. Refer to Figure 1 for receptacle location and attach all cables.

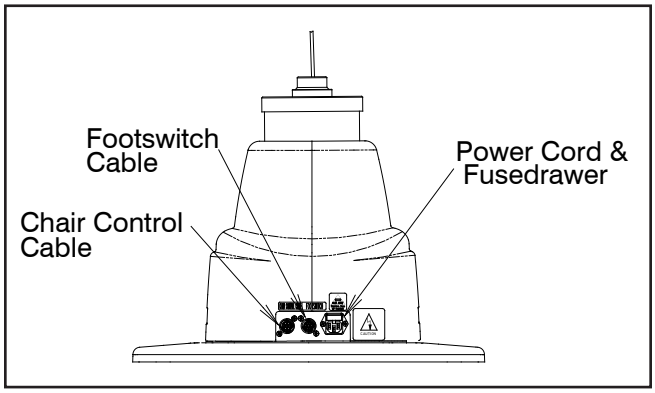

FIGURE 1
BASE

2.2.2.2. To disconnect power to Chair unplug power cord from Instrument Stand or from wall receptacle.

NOTE: If this chair is purchased in conjunction with a Reliance® instrument stand, the chair control cable supplied will provide proper operation. Refer to the instrument stand manual for connection to the stand.

REMARQUE : Si cette chaise est achetée avec un support à instruments Reliance®, le câble de commande de la chaise fourni permettra un fonctionnement adéquat. Se référer au manuel du support d'instrument pour savoir comment faire la connexion au support.

3. OPERATION

CAUTION: Caution should be taken to ensure there are no obstructions (instruments, trays, tables) impeding movement of the Chair.

PRÉCAUTION : On devrait faire attention pour s'assurer qu'il n'y a pas d'obstructions (instruments, plateaux, tables) empêchant le mouvement de la chaise.

Each time main power is applied to the chair, the circuit board inside the chair will respond with a one second beep. The beep indicates the electronics are functioning properly.

3.1. Stop Switch

3.1.1. Depressing the STOP switch on either side of the chair back will STOP ALL movement of the chair. The STOP switch is shaped like a stop sign, and should be ORANGE in color. It is located above the text "STOP". (Refer to Figure 2).

3.2. Chair Lift

3.2.1. Raising & Lowering the Chair Lift with Membrane Switches

- The chair lift may be raised or lowered by Membrane Switches on either side of the chair back (Figure 2).
- To raise the chair lift from these switches, depress the triangular-shaped UP arrow located ABOVE the text "BASE". This is called the RAISE BASE switch.
- To lower the chair lift, depress the triangular-shaped DOWN arrow located BELOW the text "BASE". This is called the LOWER BASE switch.

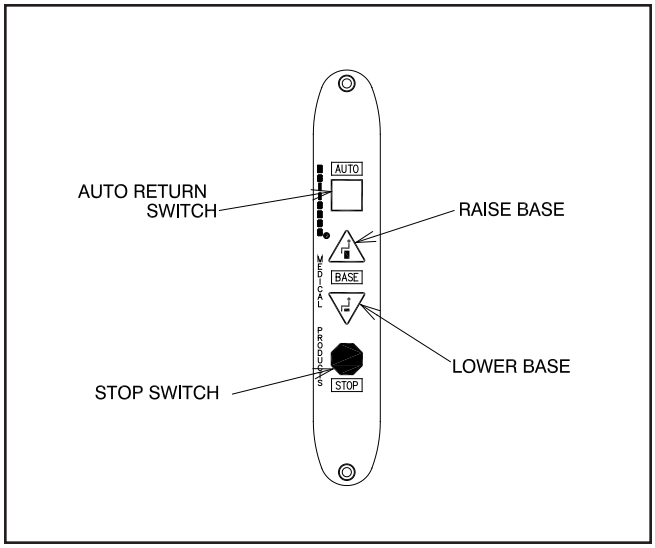

FIGURE 2
MEMBRANE SWITCH

NOTE: By design, the motion of the Chair will STOP when the RAISE or LOWER BASE switch is released.

REMARQUE : Selon la conception initiale, le mouvement de la chaise S'ARRÊTE lorsque l'interrupteur RAISE (LEVER) ou LOWER (BAISSER) la base est relâché

3.2.2. Raising & Lowering the Chair Lift from the Footswitch

- For operation from the footswitch (Figure 3), depress the right side of the pedal to raise the chair lift.
- Depress the left side of the right-hand pedal to lower the chair lift.

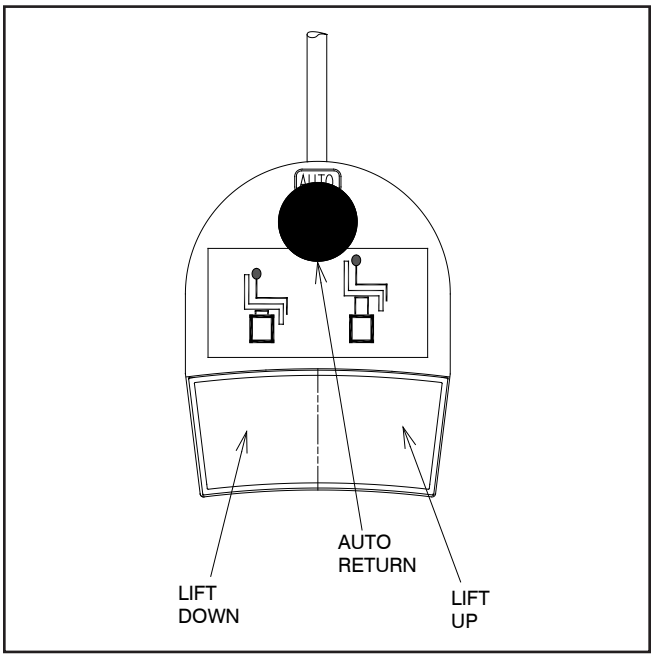

FIGURE 3
Footswitch Operation

NOTE: By design, the motion of the Chair will STOP when the RAISE or LOWER BASE switch is released.

REMARQUE : Selon la conception initiale, le mouvement de la chaise S'ARRÊTE lorsque l'interrupteur RAISE (LEVER) ou LOWER (BAISSER) la base est relâché

3.3. Chair Top

3.3.1. Positioning The Chair Back

- The chair back may be reclined or raised by either pushing downward or pulling upward on the release lever (Figure 4).
- If the chair is equipped with an articulating leg rest, the foot-step and apron will rise when the back is reclined.
- In the extreme reclined position these surfaces form a flat table.

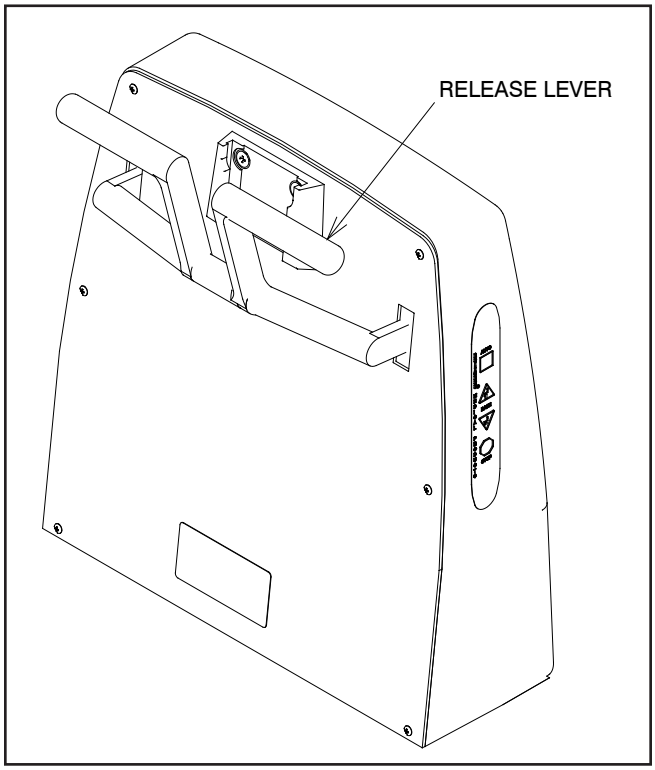

FIGURE 4
Release Lever.

3.4. Revolving/Rotation

3.4.1. The chair upper structure may be revolved 350°, with a built-in stop to prevent continuous rotation. The lock for revolving is controlled by a hand lever with chrome plated knob located below the seat at the center and on either side. Push the lever backward to release the lock and pull upward to apply the lock.

3.5. Arm Movement

3.5.1. The chair arms may be raised to provide better access to the patient or to permit entrance to or exit from the chair.

3.5.2. The movements of both arms are identical and completely independent of each other.

3.5.3. To raise an arm, push rearward on the middle joint of the arm support link while raising upward on the arm. A stop limits upward motion of the arm to a point parallel to the plane of the back. Lowering the arm automatically locks it in place against vertical motion in either direction.

CAUTION: This exam Chair is designed for use in a specific position called the Intended Use Position. Prior to reclining a patient, ensure the Chair Back is aligned with the Chair's power receptacle and that the Chair Swivel is locked. The safe working load is reduced if the Chair is swiveled away from this Intended Use Position, and may result in insufficient stability.

PRÉCAUTION : Cette chaise d'examen est conçue pour utilisation dans une position spécifique appelée la position d'utilisation prévue. Avant d'incliner un patient, assurez-vous que le dossier de la chaise est aligné avec le réceptacle d'alimentation de la chaise et que le pivot de la chaise est verrouillé. La charge de travail sécuritaire est réduite si la chaise est tournée hors de sa position d'utilisation prévue et cela pourrait causer une stabilité insuffisante.

CAUTION: This exam Chair is designed for use with a specific maximum patient weight as a static (non-moving) load. Sudden weight shifts or impact loads can exceed the safe static load rating of the Chair, and may result in insufficient stability.

PRÉCAUTION : Cette chaise d'examen est conçue pour utilisation avec un poids de patient maximum spécifique comme charge statique (sans mouvement). Les déplacements de poids soudains ou les charges dynamiques peuvent excéder la norme de charge statique sécuritaire de la chaise, ce qui pourrait causer une stabilité insuffisante.

CAUTION: This exam Chair is designed for use with a patient properly positioned in the Chair. Prior to reclining the Chair, ensure that the patient is seated in the Chair and that the patient position does not move to an extreme position either toward the head of the Chair or toward the foot of the Chair, since this may result in insufficient stability.

PRÉCAUTION : Cette chaise d'examen est conçue pour utilisation avec un patient correctement positionné dans la chaise. Avant d'incliner la chaise, assurez-vous que le patient est assis dans la chaise et que la position du patient ne se déplace pas vers une position extrême soit vers la tête, soit vers le pied de la chaise, puisque cela pourrait causer une stabilité insuffisante

3.6. Footrest

3.6.1. The footrest may be retracted by lifting near its outer edge. When fully retracted the footstep will stay in place.

3.7. Headrest

3.7.1. The No. 18 headrest is the standard headrest for the Model 6200 Chair.

WARNING- IF THE NO. 18 HEADREST RECEIVES A IMPACT OR STRIKES AN OBJECT WITH FORCE CONTACT RELIANCE® TECH SERVICE IMMEDIATELY.

AVERTISSEMENT : SI L'APPUIE-TÊTE # 18 REÇOIT UN CHOC OU FRAPPE UN OBJET AVEC FORCE, CONTACTEZ IMMÉDIATEMENT LE SERVICE TECHNIQUE RELIANCE®.

3.7.2. Operation-No. 18, 22 Headrest

3.7.2.1. The No. 18, 22 headrest is designed so it can be operated with just one hand. To unlock, squeeze the clear plastic actuator into lock housing. This will allow both pivots of the articulating arm to rotate so the headrest can be moved to a new desired position. Once in the new position, release the actuator. Make sure the actuator expands to its original position fully exposing black dot on handle to insure a positive lock. The headrest pad is free to rotate at all times. (See Figure 5).**3.7.3.**

Adjustment-No. 18, 22 Headrest

3.7.3.1. There are three adjustments provided on the No. 18, 22 headrest. The first is the tension on the pad rotation. By tightening the two hex acorn nuts on the pad pivots with a 3/8" open end wrench, the tension will be increased. To adjust the drag on the pivots of the articulating arm, loosen the set screw in the center of the pivot (Figure 5, item 1) with a 3/32" hexagon key wrench. Next, tighten the pivot screw on the other side of the pivot, with a 1/8" hexagon key wrench. Now, retighten the set screw to retain the pivot screw at the new adjustment. Either pivot may be adjusted.

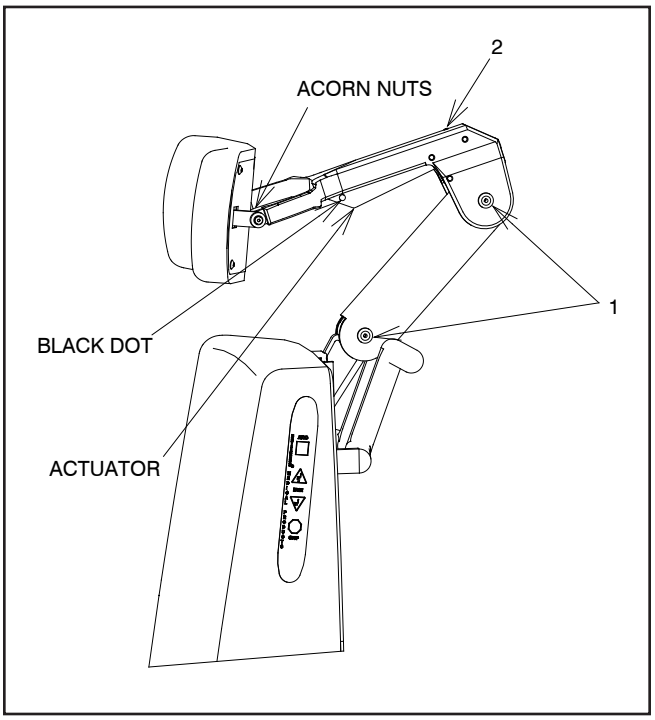

FIGURE 5
No. 18, 22 Headrest

3.7.3.2. The third adjustment is for proper clearance of the block dot to indicate that the headrest is properly locked. If the dot does not fully clear the lock housing when the headrest is locked securely, turn the set screw located at the top of the lock housing (Figure 5, item 2) counterclockwise until the dot on the actuator is fully exposed.

3.7.4. Operation-No. 10 Headrest

3.7.4.1. The No. 10 headrest has a fixed, rigid upholstered backboard which supports a sliding, center pillow section. For patient comfort simply move this pillow to a desired position.

3.7.5. Operation-No. 11, 21 Headrest

3.7.5.1. A single handle on the rear of the No. 11, 21 headrests controls the locking mechanism. To unlock, grasp the handle and turn counter-clockwise. Change the tilt of the headrest until it is in the desired position. To lock, turn the handle clock-wise until snug. (See Figure 6, No. 11 Headrest shown)

3.7.6. Adjustment-No. 11, 21 Headrest

3.7.6.1. The handle on the outermost knob can be adjusted to any preferred, locked position. Simply push in on the large screw while pulling out on the handle. Rotate as desired, and release. (See Figure 6, No. 11 Headrest shown)

3.7.6.2. The No. 21 headrest pillow assembly will slide to a preferred patient position. Simply slide pillow on the attached headrest strap to the desired position. (Not Shown)

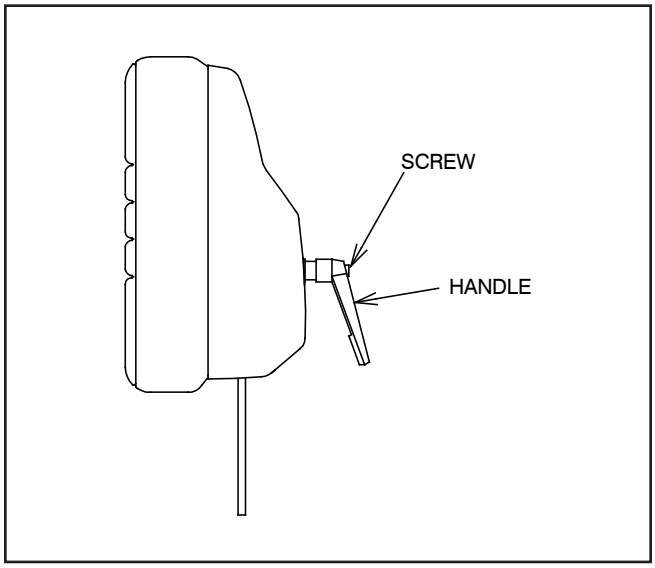

FIGURE 6
No. 11 Headrest

4.0 LOCATING AND REPLACING FUSES

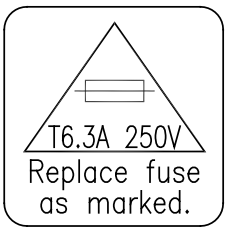

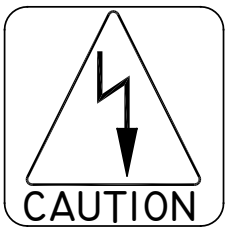

WARNING: DISCONNECT EQUIPMENT FROM MAIN INPUT POWER BEFORE PROCEEDING WITH ELECTRICAL INSPECTIONS OR MAINTENANCE.

AVERTISSEMENT : DÉCONNECTEZ L'ÉQUIPEMENT DE L'ALIMENTATION ÉLECTRIQUE PRINCIPALE AVANT DE PROCÉDER À DES INSPECTIONS ÉLECTRIQUES OU À DE L'ENTRETIEN.

CAUTION: Replace fuse(s) as marked. All fuses must be replaced with a fuse of the same size and rating. Refer to the Wire Diagrams at the end of this Manual.

PRÉCAUTION : Remplacez le(s) fusible(s) comme indiqué. Tous les fusibles doivent être remplacés par un fusible de la même dimension et de la même valeur. Se référer aux schémas de câblage à la fin de ce manuel

The chair contains two fuses located inside the AC Input Module in the Base Assembly.

4.1. Fuse Replacement (AC Input Module)

4.1.1. Unplug the power cord from the AC power input module. Referring to Figure 7, locate tab. With a tool similar to a small common screwdriver placed under tab, pry fuse drawer out. Remove the drawer by pulling it out with your fingers.

4.1.2. To remove fuses from fuse drawer, tilt fuses in direction of arrows as shown in Figure 7. Examine the fuses, replace as necessary.

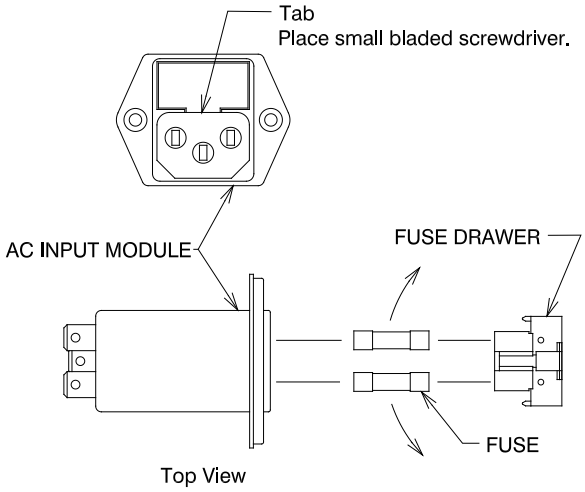

FIGURE 7
AC INPUT MODULE

CAUTION: To avoid a bind of the Fuse Drawer within the AC Input Module, never install the Fuse Drawer into the AC Input Module without fuses.

PRÉCAUTION : Pour éviter que le tiroir à fusible reste bloqué dans le module d'entrée CA, n'installez jamais le tiroir à fusible à l'intérieur du module d'entrée CA sans fusibles.

TROUBLESHOOTING GUIDE

PROBLEM	PROBLEM CAUSE	SOLUTION
CHAIR WILL NOT OPERATE.	1) POWER CORD NOT PLUGGED IN. 2) NO AC POWER AT WALL RECEPTACLE. 3) BLOWN LINE FUSE.	1) CHECK ALL WIRING CONNECTIONS. 2) RESTORE OUTLET POWER. 3) REPLACE FUSE.
OUTLET POWER OK, BUT NO BEEP IS HEARD WHEN POWER IS APPLIED.	1) BLOWN LINE FUSE. 2) LOOSE WIRING IN BASE. 3) OTHER.	1) REPLACE FUSE. 2) CHECK ALL WIRING CONNECTIONS. 3) CONTACT FACTORY
FOOTSWITCH FUNCTIONS NOT OPERATING.	1) FOOTSWITCH CORD NOT CONNECTED.	1) CHECK ALL INTERNAL AND EXTERNAL FOOTSWITCH WIRING
BACKSWITCH FUNCTIONS NOT OPERATING.	1) DAMAGED OR DISCONNECTED WIRES IN CHAIR BACK, UNDER CHAIR SEAT, OR IN CHAIR BASE	1) CHECK ALL WIRING CONNECTIONS.
CHAIR BASE WILL NOT STAY UP	1) SOLENOID VALVE NOT CLOSED. (DIRT IN VALVE.) 2) CONSTANT POWER APPLIED TO SOLENOID. 3) OTHER	1) REPAIR OR REPLACE SOLENOID VALVE. 2) CHECK FOR SWITCHES STUCK "CLOSED" . 3) CONTACT FACTORY.
CHAIR BASE WILL NOT LOWER.	1) NO POWER TO PUMP MOTOR ASS'Y. 2) SOLENOID COIL BURNED-OUT 3) OTHER	1) CHECK FOR VOLTAGE. 2) REPLACE SOLENOID COIL. 3) CONTACT FACTORY.
CHAIR BASE WILL NOT RAISE. PUMP MOTOR DOES NOT RUN.	1) NO POWER TO PUMP MOTOR ASS'Y 2) UP-LIMIT SWITCH STUCK "OPEN". 3) PUMP MOTOR BURNED-OUT. 4) OTHER	1) CHECK FOR VOLTAGE. 2) RE-ADJUST OR REPLACE SWITCH. 3) REPLACE PUMP MOTOR ASS'Y. 4) CONTACT FACTORY.
CHAIR BASE WILL NOT RAISE. PUMP MOTOR RUNS.	1) SOLENOID VALVE NOT CLOSED. (DIRT IN VALVE.) 2) CONSTANT POWER APPLIED TO SOLENOID. 3) OTHER.	1) REPAIR OR REPLACE SOLENOID VALVE. 2) CHECK FOR SWITCHES STUCK "CLOSED". 3) CONTACT FACTORY.
BASE "STUTTERS" DURING ASCENT.	1) HYDRAULIC FLUID LEVEL IS LOW.	1) CONTACT DEALER OR FACTORY FOR INFORMATION ON ADDING OIL.
CHAIR BASE WILL NOT RAISE OR LOWER FROM FLOOR UNIT.	1) CHAIR CONTROL CABLE NOT PLUGGED IN. 2) BLOWN FUSE IN CHAIR BASE.	1) CHECK CABLE CONNECTIONS AT STAND CHAIR 2) REPLACE FUSE.
CHAIR TOP "WOBBLES" ON CHAIR BASE	1) LOCK NUT IS LOOSE. (UNDER SEAT BOARD.)	1) TIGHTEN LOCK NUT.
CHAIR BACK RECLINES FULLY WITHOUT HANDLE BEING ACTIVATED.	1) BACK SPRING FAILURE	1) ADJUST GAS SPRING 2) REPLACE GAS SPRING
CHAIR BACK SPONGY WHEN PATIENT PUTS PRESSURE ON CHAIR BACK.	1) BACK SPRING FAILURE	1) REPLACE GAS SPRING

CLEANING AND MAINTENANCE

Cleaning the Upholstery

When cleaning upholstery, it is suggested that you use all recommended commercial cleaning agents in an inconspicuous spot to check for potential damage to the upholstery material before applying to the entire area to be cleaned.

Day to Day soil:

Remove ordinary dirt and smudges with a mild soap and warm water solution. Dry with a soft, lint-free cloth or towel. For more difficult stains, use of a stronger detergent is recommended; however, follow the detergent manufacturer's instructions closely.

Disinfecting Material:

In order to disinfect, use a 1:9 solution of bleach and water (1 part bleach to 9 parts water). Wipe surface with damp cloth then rinse with water immediately, using a damp cloth.

Special cleaning problems:

The following methods are recommended to clean stains on PreFixx-protected vinyl upholstery. Most stains will be removed when these cleaning agents are used in the following order.

Type 1 Cleaners: Nonabrasive household cleaners to be used with water and a soft cloth.

- Formula 409~ All-Purpose Spray Cleaner
- Fantastik® Spray Cleaner
- Other similar household cleaners and bleaches

Type 2 Cleaners: Solvent-type cleaner to be liberally applied with a soft cloth. Dry area with another cloth, rinse with clean water and dry.

- Rubbing alcohol (isopropyl alcohol)
- Lighter fluid (naptha)

Type 3 Cleaners: Strong, active solvent cleaners such as nail polish remover (acetone/water) to be applied with a soft cloth. Stain should be removed with less than six (6) rubs; if stain persists after six rubs, contact manufacturer. Dry area with another cloth, rinse with clean water and dry.

CAUTION- These solvents are highly flammable. Exercise proper care in cleaning and notify personnel in area of danger. Wear rubber gloves during all cleaning activity. Use caution in cleaning around buttons, stitching and wooden or other decorative trim, since these solvents could seriously damage such areas.

PRÉCAUTION : Ces solvants sont extrêmement inflammables. Faites très attention lors du nettoyage et avisez le personnel dans la zone de tout danger. Portez des gants de caoutchouc durant toute activité de nettoyage. Faites attention en nettoyant autour des boutons, des coutures et autres finitions de bois ou décoratives, puisque ces solvants pourraient endommager sérieusement ces endroits.

Cleaning Painted Surfaces

The painted metal surfaces are covered in durable, powder-coated paint which is resistant to scratching and scuffing. It may be cleaned with a clean cloth dampened with mild, soapy water or equivalent household product that uses spray application.

Recommended Infection Control Products

The disinfectant/cleaner products that we have tested and recommend for our upholstery, painted items and plastic covers are as follows.

- Cavicide® Hospital Disinfectant
- Precise® Hospital Foam Cleaner Disinfectant

CAUTION: Follow manufacturer's directions for concentration and application of disinfecting cleaner. Avoid prolonged application of any disinfectant/cleaner products, because they may cause staining or discoloration of material.

PRÉCAUTION : Suivez les instructions du fabricant pour la concentration et l'application de nettoyeurs désinfectants. Évitez une application prolongée de tout produit désinfectant/nettoyant, parce que ceux-ci pourraient causer des taches ou une décoloration du matériel.

WARNING: REFER TO LOCAL OR HEALTHCARE PROFESSION GUIDELINES FOR SELECTING EFFECTIVE INFECTION CONTROL PRODUCTS.

AVERTISSEMENT : SE RÉFÉRER AUX DIRECTIVES LOCALES OU DES PROFESSIONS DE LA SANTÉ POUR SÉLECTIONNER DES PRODUITS DE CONTRÔLE D'INFECTION EFFICACES.

PARTS LIST
RELIANCE® MODEL 6200
EXAMINATION AND TREATMENT CHAIR

Note: When ordering parts, please:

1. Advise dealer or factory of model and serial number of unit. These numbers are on the plate that is located at rear, near bottom, of chair back.

2. Specify color of painted parts. Painted parts have an asterisk(*) behind the part description.

Note : Quand pièces de commande, s'il vous plaît :

1. Informez le distributeur ou l'usine du modèle et du numéro de série de l'ensemble. Ces numéros sont de la plaque qui est située à l'arrière, près du bas, de l'arriére de présidence.

2. Indiquez la couleur des pièces peintes. Les pièces peintes ont un astérisque (*) derrière la description de pièce.

Should your chair not perform properly, or if replacement parts are needed, contact the Reliance® Distributor, where you purchased this product or contact the Technical Service Department, Reliance® Medical Products, Inc., 3535 Kings Mills Road, Mason, Ohio 45040-2303, or call (800) 735-0358.

FIGURE 7
6200 CHAIR ASSEMBLY

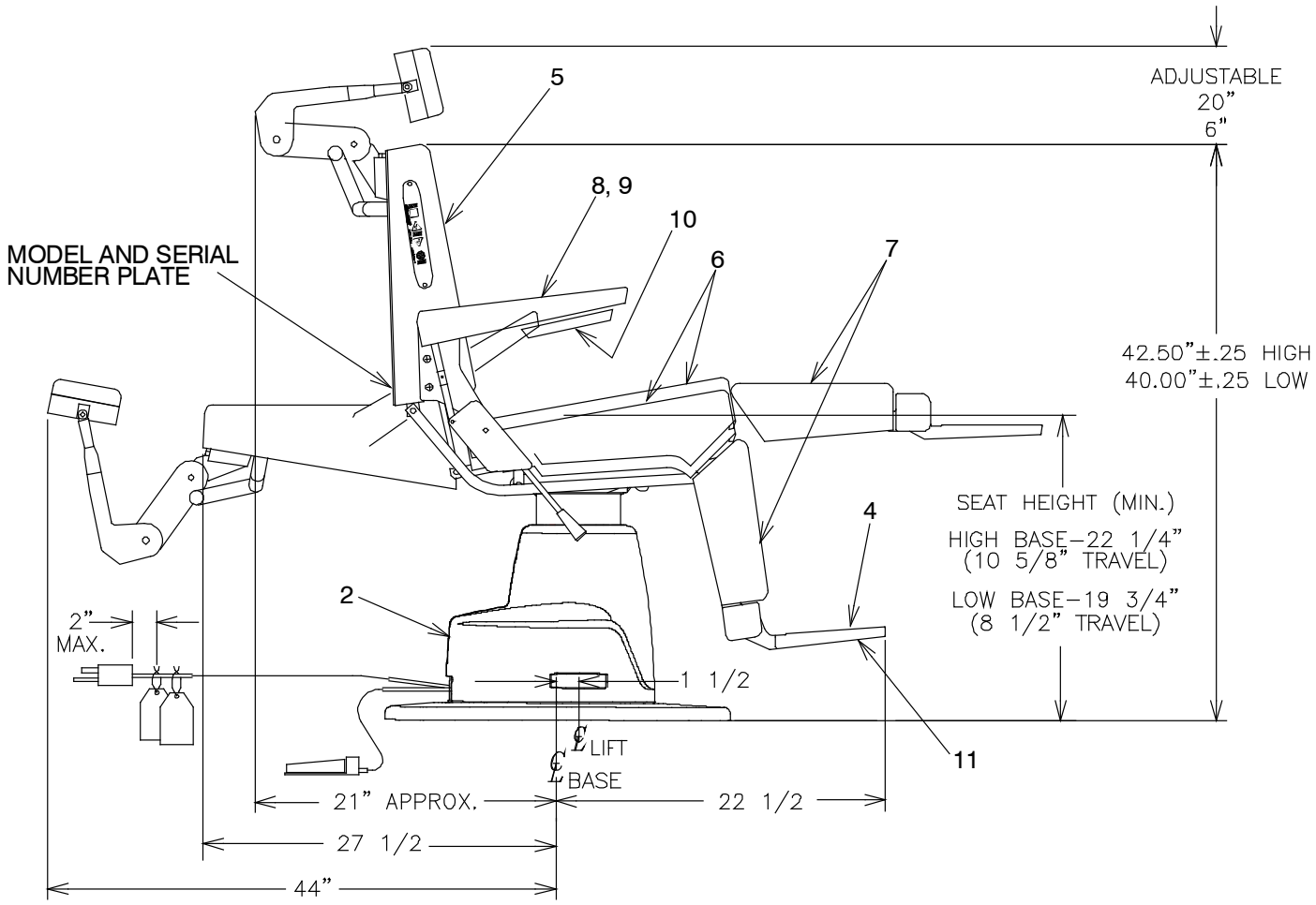

ITEM	PART NO.	DESCRIPTION	ITEM	PART NO.	DESCRIPTION
1		Chair Top Assembly* (See Figure 8)	7	1479473	Upholstered Apron Assembly**
2		Base Assembly* (See Figure 9)	8	1467673	Upholstered Arm Assembly-Right**
3		Headrest Assemblies (See Figures 11 thru 14)	9	1467773	Upholstered Arm Assembly-Left**
4	1760403	Footstep*	10	0667873	Upholstered Arm Pad Assembly**
5	1715073	Upholstered Back Assembly**	11	1765073	Scuff Pad**
6	1479373	Upholstered Seat Assembly**	12		

** Please specify upholstery color when ordering.
To order complete Upholstery Set use P/N.

2727873 Designer Upholstery Set With No. 18 Headrest Pad - 6200

*Please specify paint color when ordering.

FIGURE 8
6200 CHAIR ASSEMBLY

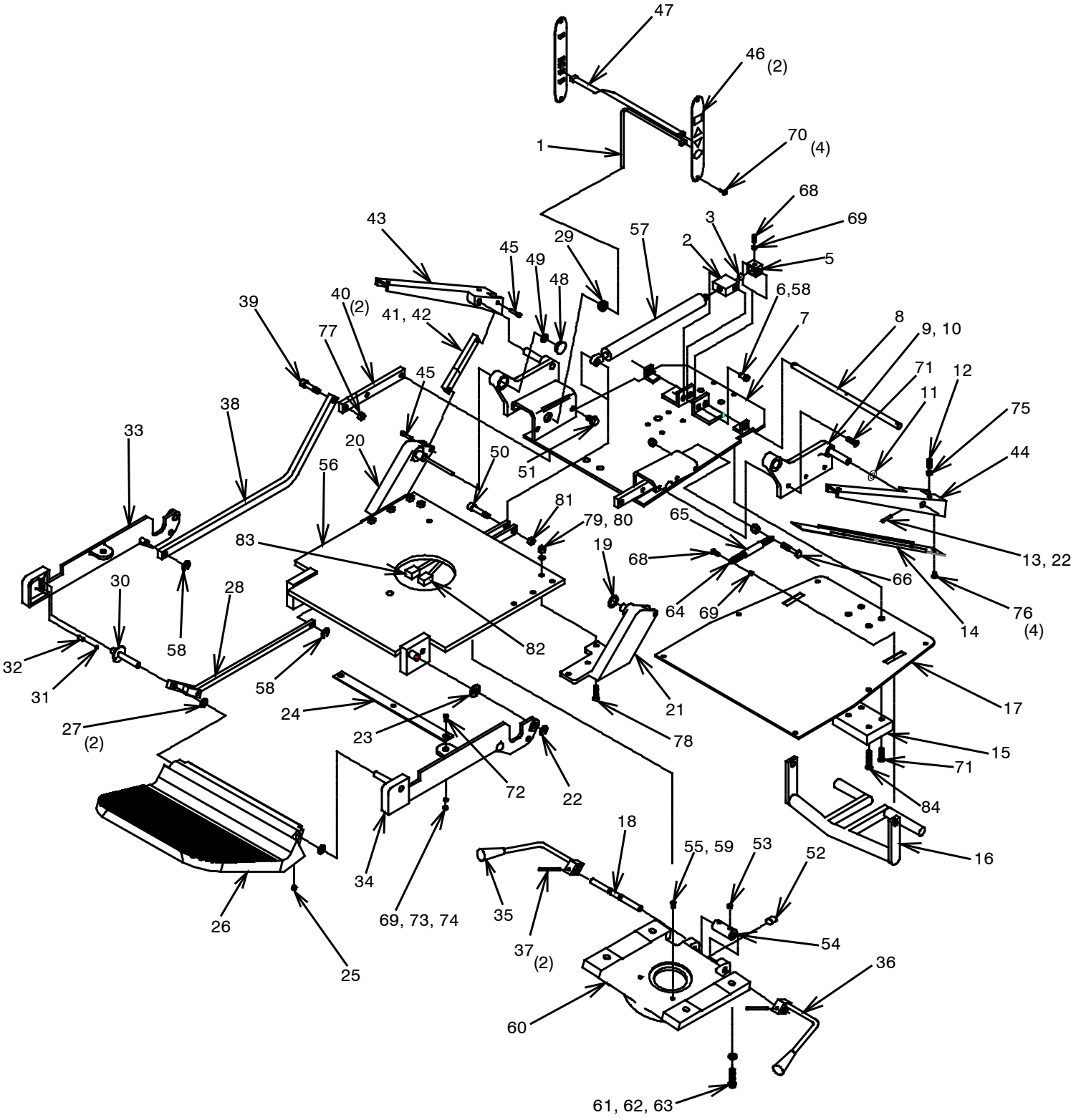

ITEM	PART NO.	DESCRIPTION	ITEM	PART NO.	DESCRIPTION
1	1546699	Hinge Cable Assembly	23	0729699	1/2 Washer
2	1472195	Gas Spring Pivot Block	24	1472795	Apron Tie Bar
3	0978499	5/8 Dia. Steel Ball	25	0722899	S.S.H.S. 1/4-20 x 3/8
4			26	1760403	Footrest*
5	1471995	Gas Spring Rease Actuator	27	0609699	Fiber Washer
6	1509199	Pivot Block Pin	28	1471882	Footrest Link
7	1475685	Back Plate Weldment	29	1734099	Snap Bushing
8	1604095	Gas Spring Release Pivot	30	0614299	Footstep Pin Assembly
9	1477503	Side Plate Assembly - Right*	31	0606099	9/32 Dia Steel Ball
10	1477603	Side Plate Assembly - Left*	32	0605999	Spring
11	0396299	Spring Washer	33	1473803	Apron Bracket - Right*
12	0725999	S.H.S.S. 1/4-20 x 3/4	34	1473903	Apron Bracket - Left*
13	0761899	3/16 x 1 Roll Pin	35	0605299	Lock Handle Assembly - Right
14	0556285	Armrest Cover	36	0605399	Lock Handle Assembly - Left
15	0136703	Headrest Bracket*	37	0569499	Roll Pin 3/16 x 3/4
16	1573503	Gas Spring Release Bar*	38	1473203	Apron Control Link*
17	1473472	Back Cover - With ENT*	39	0401299	3/8 x 1 Shoulder Bolt
	1472672	Back Cover - Without ENT*	40	1472203	Apron Control Arm*
18	0605499	Lock Shaft	41	1842692	Armrest Link Assembly - Right
19	0411199	Fiber Washer	42	1842792	Armrest Link Assembly - Left
20	0603803	Back Hinge Assembly - Right*	43	0122203	Armrest Bracket - Right*
21	0603903	Back Hinge Assembly - Left*	44	0122303	Armrest Bracket - Left*
22	0732699	1/2 Retaining Ring	45	0563299	Linkage Pin

For Items 46 thru 84 see page 18.

*Please specify paint color when ordering.

ITEM	PART NO.	DESCRIPTION	ITEM	PART NO.	DESCRIPTION
46	2027099	Membrane Switch Assembly	66	0706399	H.H.C.S. 1/4-20 x 1 1/2
47	1546299	Ribbon Cable	67	0527899	1/4-20 Flex Lock Nut
48	0387303	Plug Button*	68	0758599	R.H.M.S. #10-24 x 5/8
49	0603399	Truarc Ring	69	0703299	#10-24 Hex Nut
50	1472999	10mm x 30mm Shoulder Bolt	70	0569699	O.H.W.S. #6 x 3/4 Phil
51	0307999	H.H.C.S. 5/16-18 x 3/4	71	0808699	F.H.C.S. 1/4-20 x 1 Sck't
52	0643599	Lock Plug	72	0929199	F.H.M.S. #10-24 x 3/4 Phil
53	0722899	S.H.S.S. 1/4-20 x 3/8	73	0728199	#10 Split Lock Washer
54	0561799	Locking Cam	74	0729999	1/4 Washer
55	1036799	H.H.C.S. 5/16-18 x 5/8	75	0704099	1/4-20 Hex Nut
56	1504185	Seat Plate Weldment	76	0716499	T.H.M.S. #10-24 x 3/8
57	2014399	Gas Spring	77	0704899	5/16-18 Hex Nut
58	0732599	Truarc Ring	78	0713599	F.H.M.S. 1/4-20 x 1.25 Phil
59	0728399	5/16 Washer	79	0729199	1/4 Lock Washer
60	1964085	Seat Support	80	0703699	1/4-20 Keps Nut
61	0708599	H.H.C.S. 3/8-16 x 1 1/2	81	1475399	M8 x 1.25 Hex Nut
62	0728499	3/8 Lock Washer	82	1660799	4 Circuit Cap
63	0705199	3/8-16 Nut	83	1660899	6 Circuit Cap
64	1586899	6 in Extention Spring	84	0299899	F.H.M.S. 1/4-20 x 2 1/2 Phil
65	1655599	6 1/2 in Flexible Tubing	85		

Part List for Figure 8 page 16

*Please specify paint color when ordering.

(NOTES)

FIGURE 9
6200 BASE ASSEMBLY

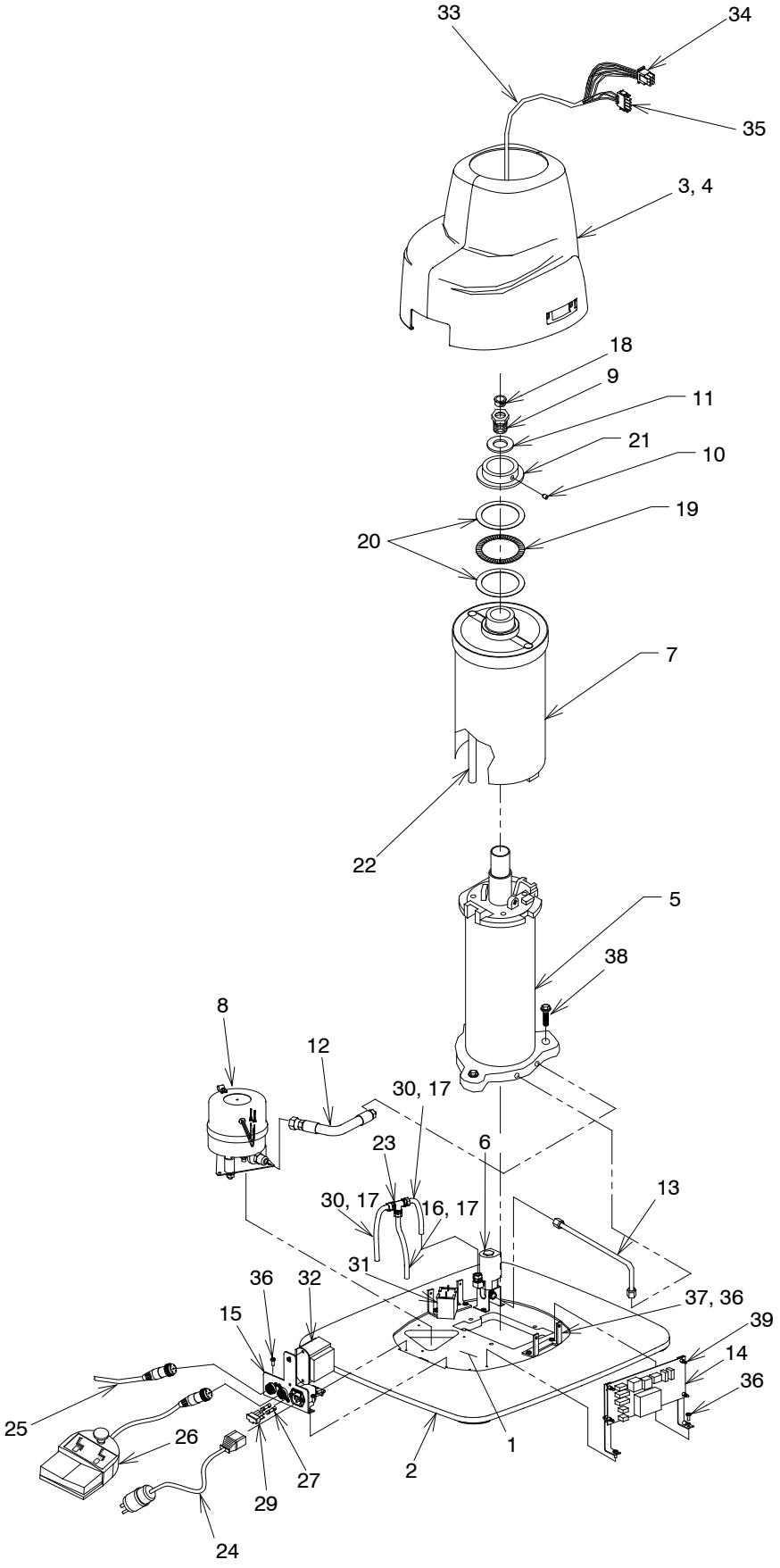

ITEM	PART NO.	DESCRIPTION
1	2081203	Base
2	2065599	Base Cover
3	2065199	Base Housing - Low - RH
	2065399	Base Housing - High - RH
4	2065299	Base Housing - Low - LH
	2065499	Base Housing - High - LH
5		Lift Assembly (See Figure 10)
6	1707792	Solenoid Valve Assembly-120V
	1707892	Solenoid Valve Assembly-230V
7	1702892	Keyshield Assembly-Low*
	1702992	Keyshield Assembly-High*
8	2720092	Pump/Motor Assembly-120V
	2720192	Pump/Motor Assembly-230V
9	1547899	Piston Rod Bolt
10	1525899	Set Screw-#10-24 x 1/4
11	0607299	Washer
12	2721092	Hose Assembly
13	1596292	Pressure Tube Assembly
14	2025599	P.C. Board Assembly
15	2720892	AC Input Assembly
16	0458999	Tubing-5-1/2 in
17	1081999	Tubing Insert
18	1547999	Snap Bushing
19	0559999	Thrust Bearing

ITEM	PART NO.	DESCRIPTION
20	0560099	Thrust Washer
21	0123885	Lock Nut
22	1548195	Wiring Tube-High
	1548395	Wiring Tube-Low
23	1127599	Union Tee
24	1659299	Power Cord Assembly
25	1550599	Chair Control Cable-LV To LV
26	1608292	Footswitch Assembly
27	1634299	Fuse, 6.3 A / 250V-120V
	1634999	Fuse, 4 A / 250V-230V
28	1976799	Power Entry Module W/ Filter
29		Fusedrawer, 2 Pole (In Item 28)
30	0458999	Tubing-5 in
31	1597299	Capacitor, Starting-120V
	2002199	Capacitor, Starting-230V
32	1993592	Ent Transformer Assembly - 120V
	1994392	Ent Transformer Assembly - 230V
33	2722099	Base Cable Grey
34	1643899	6 Circuit Plug
35	1643799	4 Circuit Plug
36	1720399	PH Phil w/Lock Washer-#10-24 x 1/2
37	2081099	Housing Mount Bracket
38	0708599	HHCS 3/8-16 x 1.5
39	1569999	Circuit Board Support

NOTE- Power cord for 230V base does not include a plug.

NOTE- Le cordon de secteur pour la base 230V ne comprend pas une fiche.

To order complete Base Assembly use P/N's.

2716292 Chair Base Assembly - Low - 120V*
2716392 Chair Base Assembly - High - 120V*
2716492 Chair Base Assembly - Low - 230V*
2716592 Chair Base Assembly - High - 230V*

*Please specify paint color when ordering.

FIGURE 10
LIFT ASSEMBLY

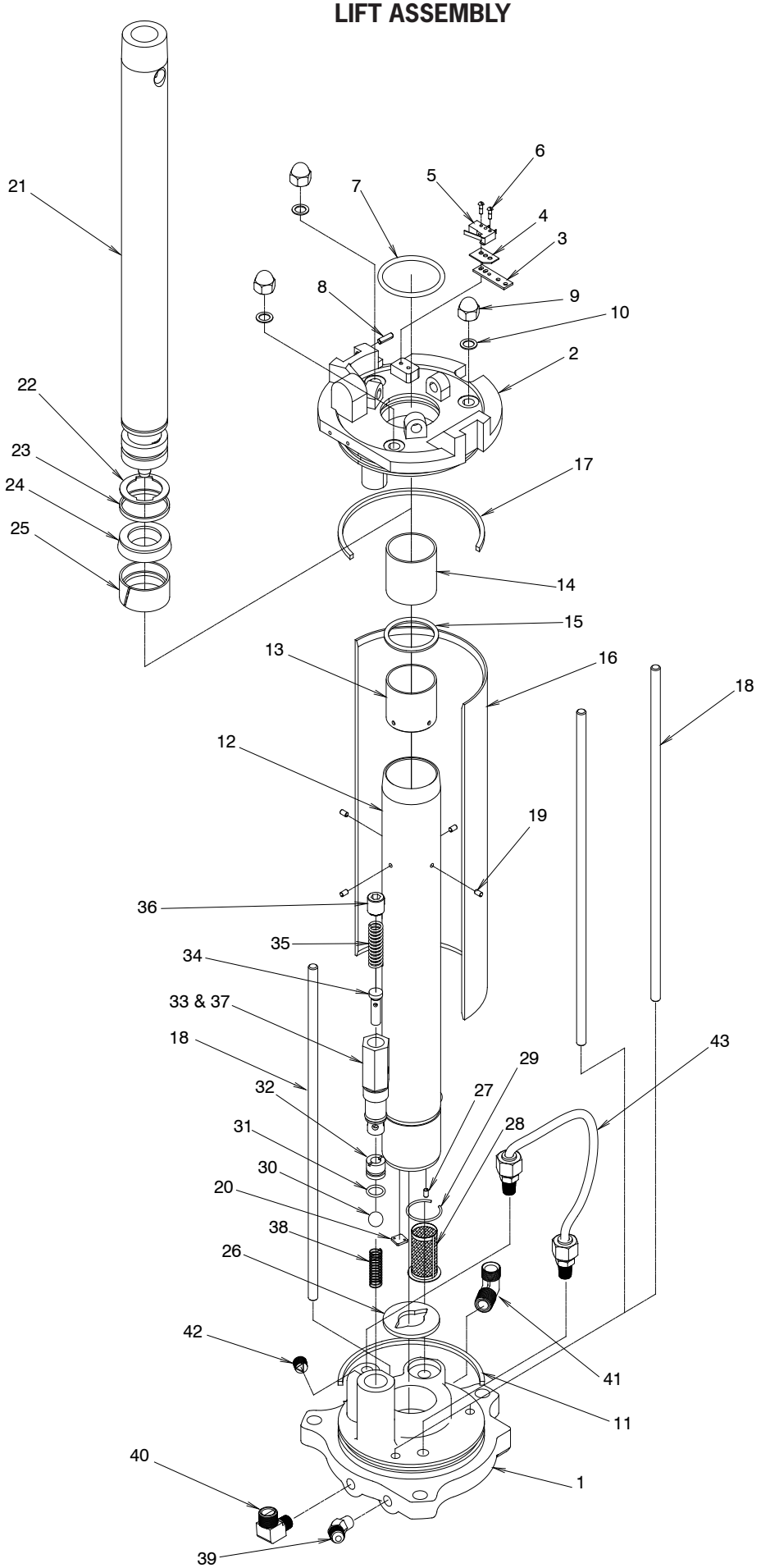

ITEM	PART NO.	DESCRIPTION	ITEM	PART NO.	DESCRIPTION
1	1012795	Lift Base	22	0733299	Retaining Ring
2	1019095	Lift Top	23	0512599	Backup Ring
3	0439979	Switch Plate	24	0730899	U - Pack
4	0929699	Insulator	25	0512499	Piston Ring
5	1011399	Switch	26	0353199	Cylinder Gasket
6	0727599	Drive Screw	27	0569299	Pin - Roll
7	0731499	"O" Ring	28	0466399	Filter Screen
8	1454699	Pin	29	0446099	Snap Ring
9	0485199	Nut - Acorn 5/16	30	0741799	Valve Ball
10	0365799	Gasket - Tie Rod	31	0731199	"O" Ring
11	0432599	Base Column Seal	32	0441999	Valve Seat
12	0903292	Cylinder Assembly - High	33	1012499	Valve Housing
	0526792	Cylinder Assembly - Low	34	0363299	Relief Valve Plunger
13		Spacer - Cylinder (in Item 12)	35	0784699	Relief Valve Spring
14		Bushing (in Item 12)	36	1012399	Set Screw
15		Ring - Quad (in Item 12)	37	0731299	"O" Ring
16	0902285	Base Column - High	38	0442499	Valve Spring
	0563885	Base Column - Low	39	2720799	Elbow - 45°
17	0432599	Base Column Seal	40	1081899	Elbow - 90°
18	0901999	Tie Rod - High	41	0447199	Elbow - 90°
	0563699	Tie Rod - Low	42	0303699	Plug - Pipe 1/8-27 Sckt Head
19		Pin - Roll (in Item 12)	43	1060392	Tubing Assembly
20	0422899	Disc - Valve			
21	1183592	Piston Rod - High			
	1183692	Piston Rod - Low			

To order complete Lift Assembly use P/N's.

2721192 Lift Assembly - Low
2721292 Lift Assembly - High

FIGURE 11
18 & # 22 HEADREST ASSEMBLY

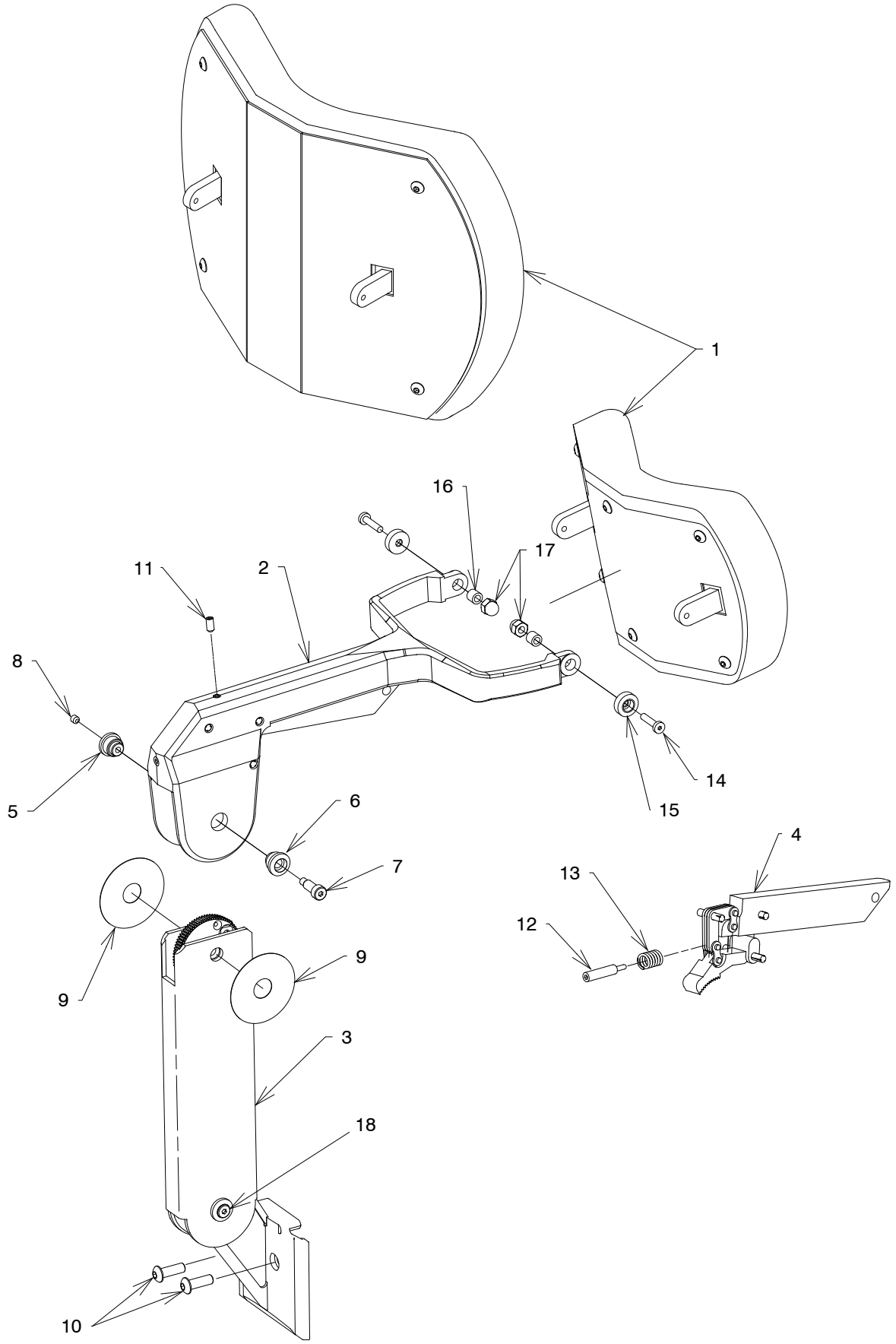

ITEM	PART NO.	DESCRIPTION
1	0475673	Pad Assembly - No. 18*
	1680073	Pad Assembly - No. 22*
2	1460492	Yoke Assembly*
3	1460592	Gear & Bracket Assembly*
4	1470692	Actuator & Lock Gear Assembly
5	1425299	Pivot Cap, Right
6	1425399	Pivot Cap, Left
7	0307599	Screw, Shoulder 1/4 x 1
8	0726099	S.H.S.S. #10-24 x 3/16
9	1424999	Washer, 2" OD
10	1454799	B.H.C.S. 1/4-28 x 1/2
11	1456399	S.H.S.S. #10-24 x 3/8
12	1427099	Spring Plunger
13	1538899	Spring
14	1454999	L.H.C.S. #10-24 x 3/4 - Socket
15	1434799	Pivot Cap, Pad
16	0467195	Bushing .188 I.D x .312 O.D.
17	1456199	Nut, Acorn 1/4-20 Low Crown
18	1425699	Screw, Shoulder .25 x .50

To order complete Headrest Assembly use P/N.

144080 #18 Headrest Assembly*
144070 #22 Headrest Assembly*

*Please specify paint color when ordering.
** Please specify upholstery color when ordering.

To order complete Screw Assembly use P/N.

2721692 Middle Joint Screw Assembly
Includes: Item's 5, 6, 7 & 8.

2721792 Bottom Joint Screw Assembly
Includes: Item's 5, 6, 8 & 18

FIGURE 12
 # 10 HEADREST ASSEMBLY

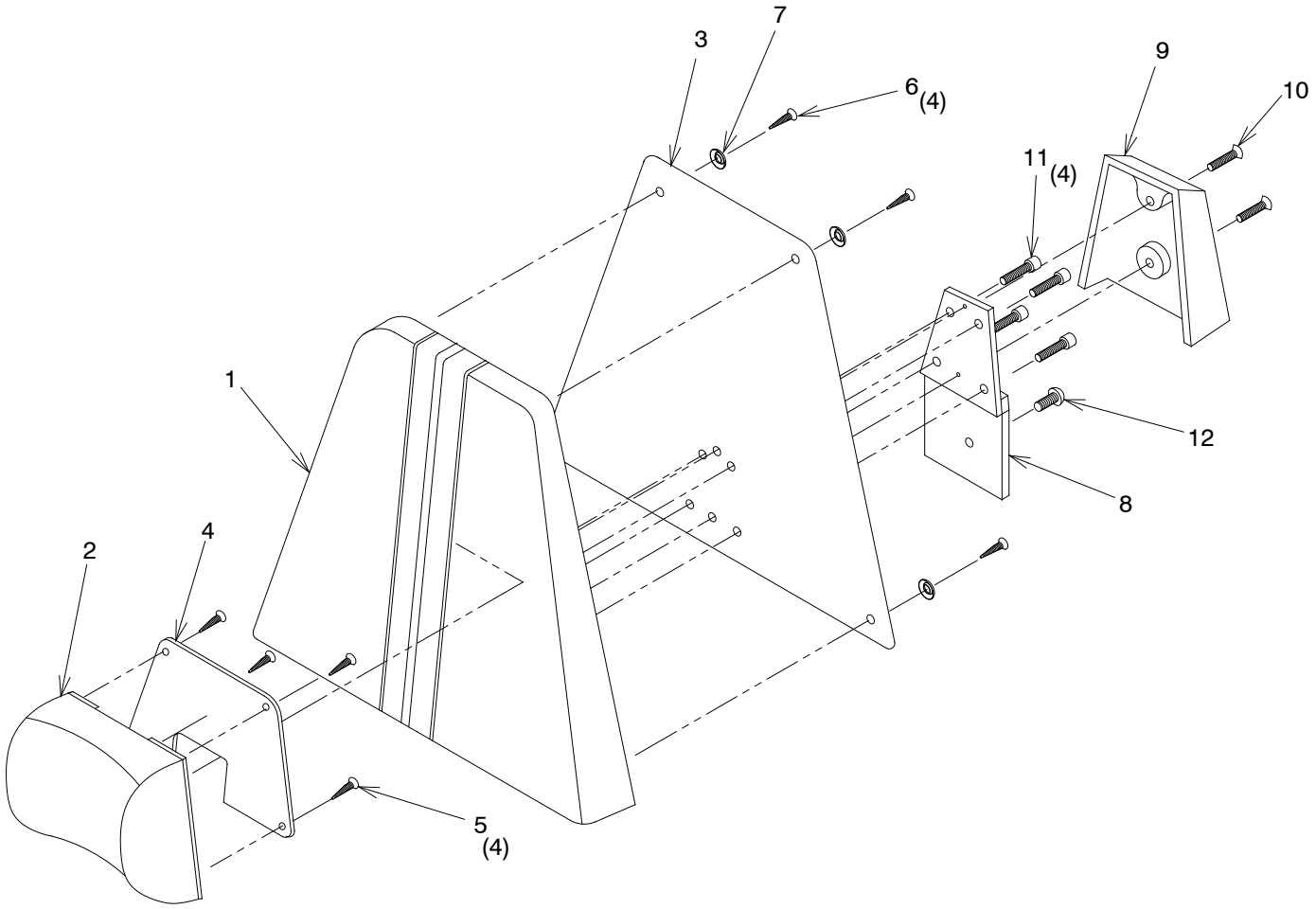

ITEM	PART NO.	DESCRIPTION
1	0665073	Uph # 10 Board Assembly**
2	0574173	Pillow Assembly - #10**
3	0567903	High Back Cover*
4	0568003	Pillow Back Cover*
5	0845199	F.H.W.S. #6 x .50 - Phil
6	0569699	O.H.W.S. #6 x 3/4
7	0569799	#6 Finishing Washer
8	0557499	Mounting Plate Assembly
9	0123203	Bracket Cover*
10	0808699	F.H.C.S 1/4-20 x 1.00 - Socket
11	0788699	S.H.C.S. 1/4-20 x 1.00
12	1454799	B.H.C.S. 1/4-28 x 1/2

To order complete Headrest Assembly use P/N.

665200 #10 Headrest Assembly*

*Please specify paint color when ordering.
** Please specify upholstery color when ordering.

FIGURE 13
 # 11 HEADREST ASSEMBLY

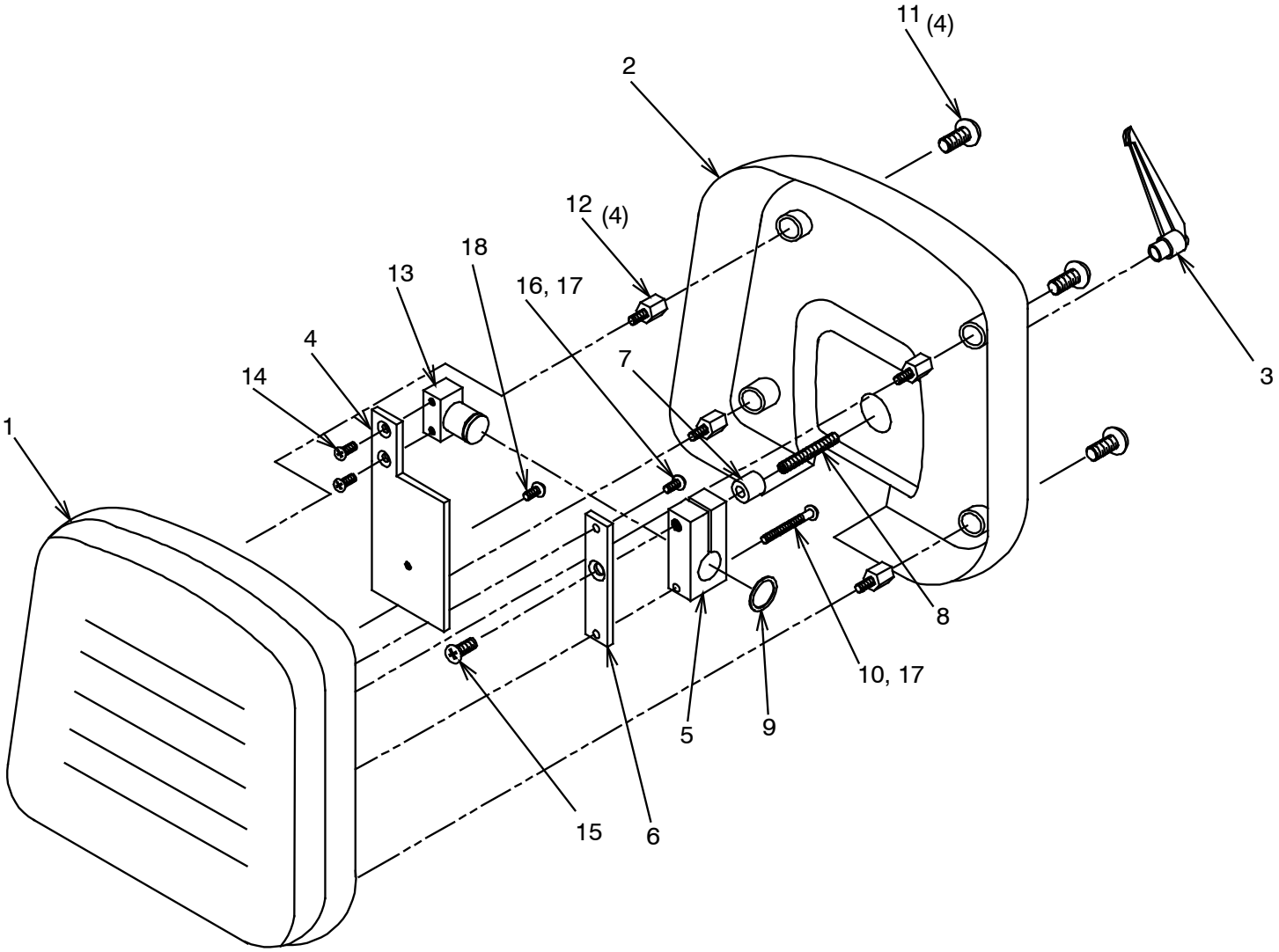

ITEM	PART NO.	DESCRIPTION
1	1557573	Uph # 11 Pad Assembly**
2	1558897	Headrest Cover
3	1562499	3/8" Adjustable Handle
4	1558903	Mounting Plate*
5	1559295	Headrest Lock Block
6	1559395	Headrest Pad Mounting Plate
7	1207199	3/4 O.D x 3/8 I.D x 3/4 Spacer
8	1562899	S.H.S.S. 3/8-16 x 2 1/2
9	0472999	Retaining Ring
10	1559599	R.H.M.S 1/4-20 x 2 1/2
11	1523699	T.H.M.S. 5/16-18 x 3/8
12	1571799	Short Standoff
13	1559092	Stud Mount Assembly
14	0712999	F.H.M.S 1/4-20 x 3/4
15	1559499	F.H.M.S 3/8-16 x 3/4
16	0713199	R.H.M.S 1/4-20 x 3/4
17	0728299	1/4 Lockwasher
18	1454799	B.H.C.S., 1/4-28 x 1/2

To order complete Headrest Assembly use P/N.

155720 #11 Headrest Assembly*

*Please specify paint color when ordering.
** Please specify upholstery color when ordering.

FIGURE 14
 # 21 HEADREST ASSEMBLY

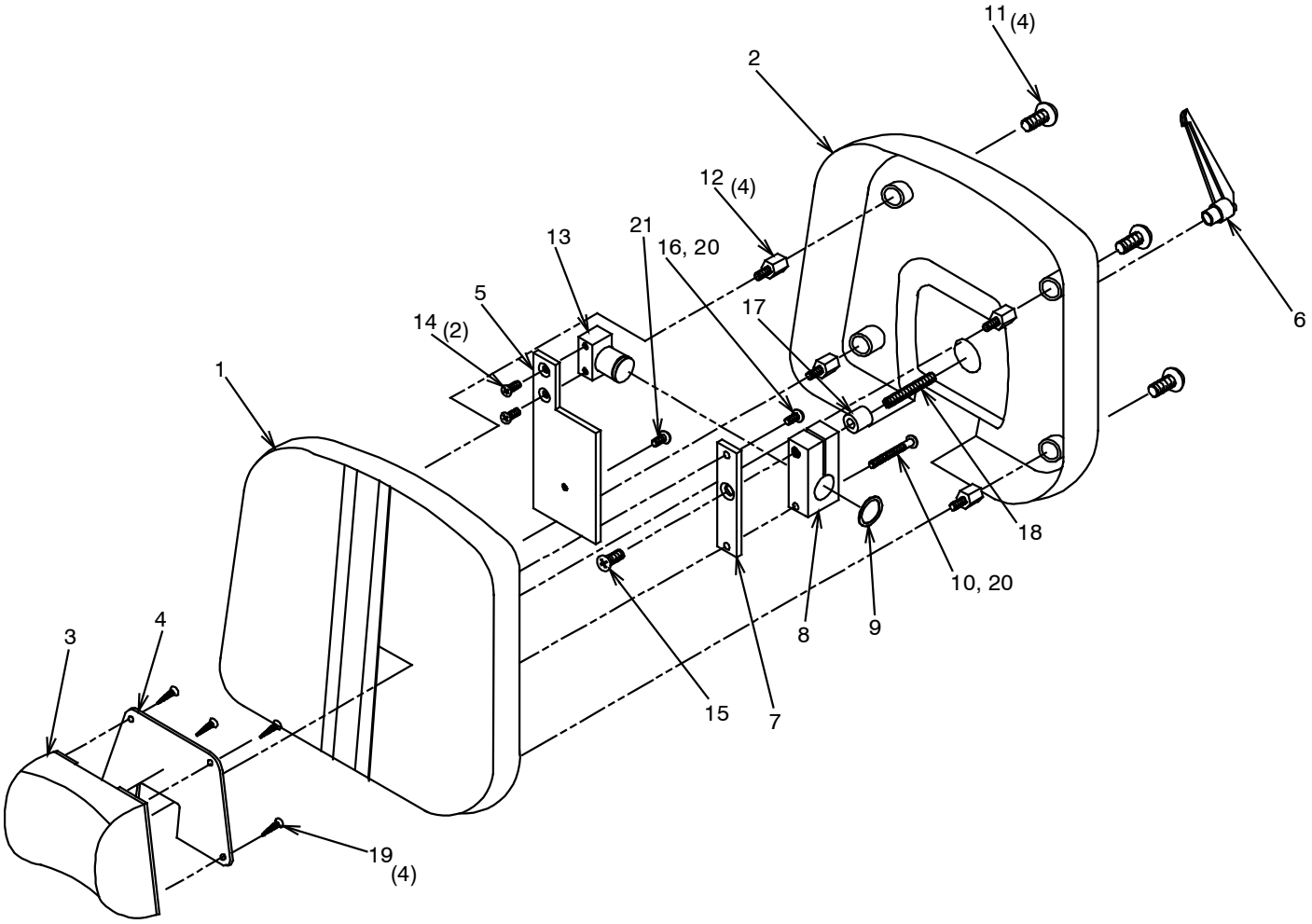

ITEM	PART NO.	DESCRIPTION
1	1846373	Uph # 21 Pad Assembly**
2	1558897	Headrest Cover
3	0574173	Pillow Assembly**
4	0568003	Pillow Board Back Cover*
5	1558903	Mounting Plate*
6	1562499	3/8" Adjustable Handle
7	1559395	Headrest Pad Mounting Plate
8	1559295	Headrest Lock Block
9	0472999	Retaining Ring
10	1559599	R.H.M.S 1/4-20 x 2 1/2
11	1523699	T.H.M.S. 5/16-18 x 1/2
12	1571799	Short Standoff
13	1559092	Stud Mount Assembly
14	0712999	F.H.M.S 1/4-20 x 3/4
15	1559499	F.H.M.S 3/8-16 x 3/4
16	0713199	R.H.M.S 1/4-20 x 3/4
17	1207199	3/4 O.D x 3/8 I.D x 3/4 Spacer
18	1562899	S.H.S.S. 3/8-16 x 2 1/2
19	0845199	F.H.W.S. #6 x 1/2 - Phil
20	0728299	1/4 Lockwasher
21	1454799	B.H.C.S., 1/4-28 x 1/2

To order complete Headrest Assembly use P/N.

184640 #21 Headrest Assembly*

*Please specify paint color when ordering.
** Please specify upholstery color when ordering.

FIGURE 15
WIRING DIAGRAM

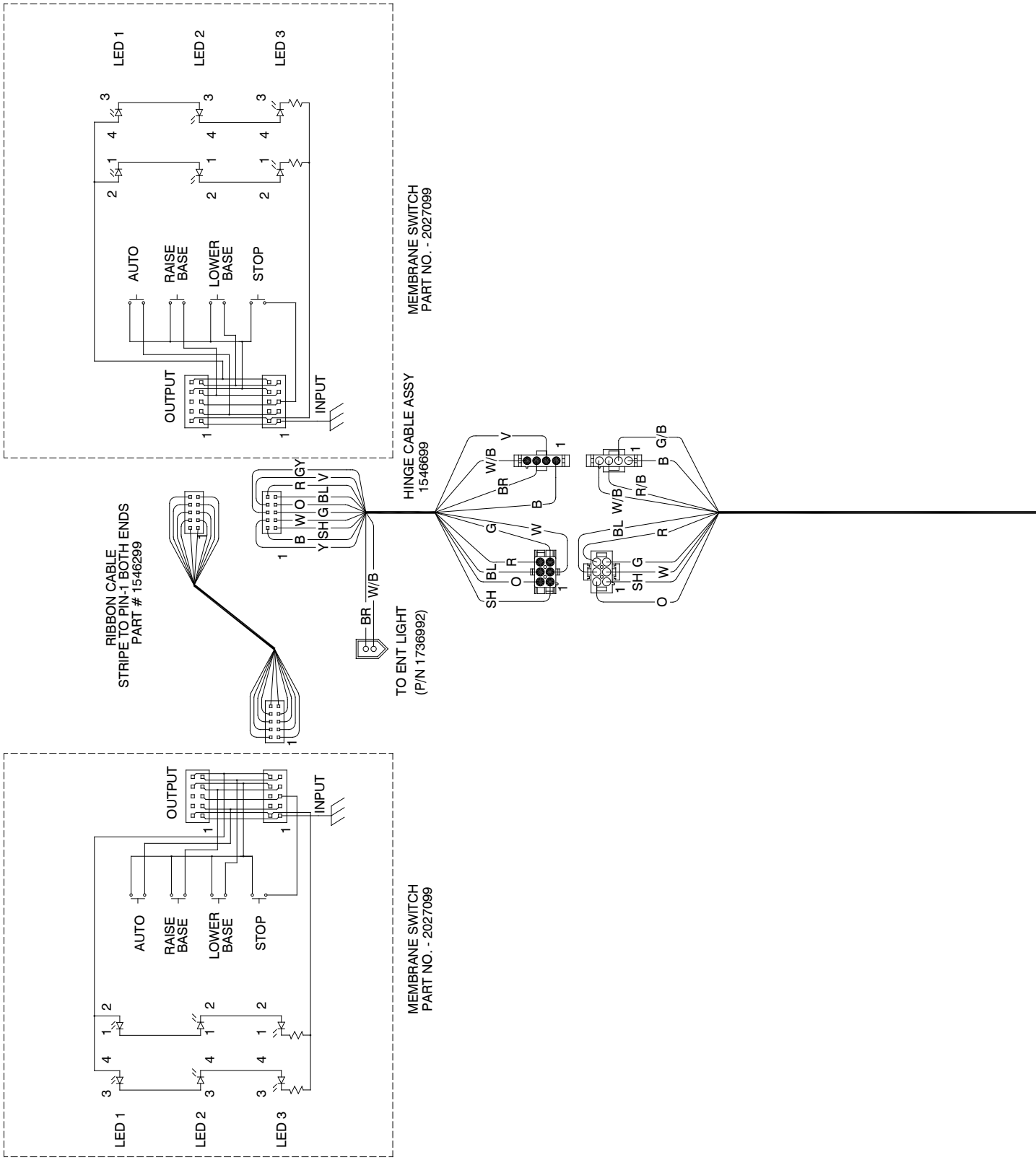

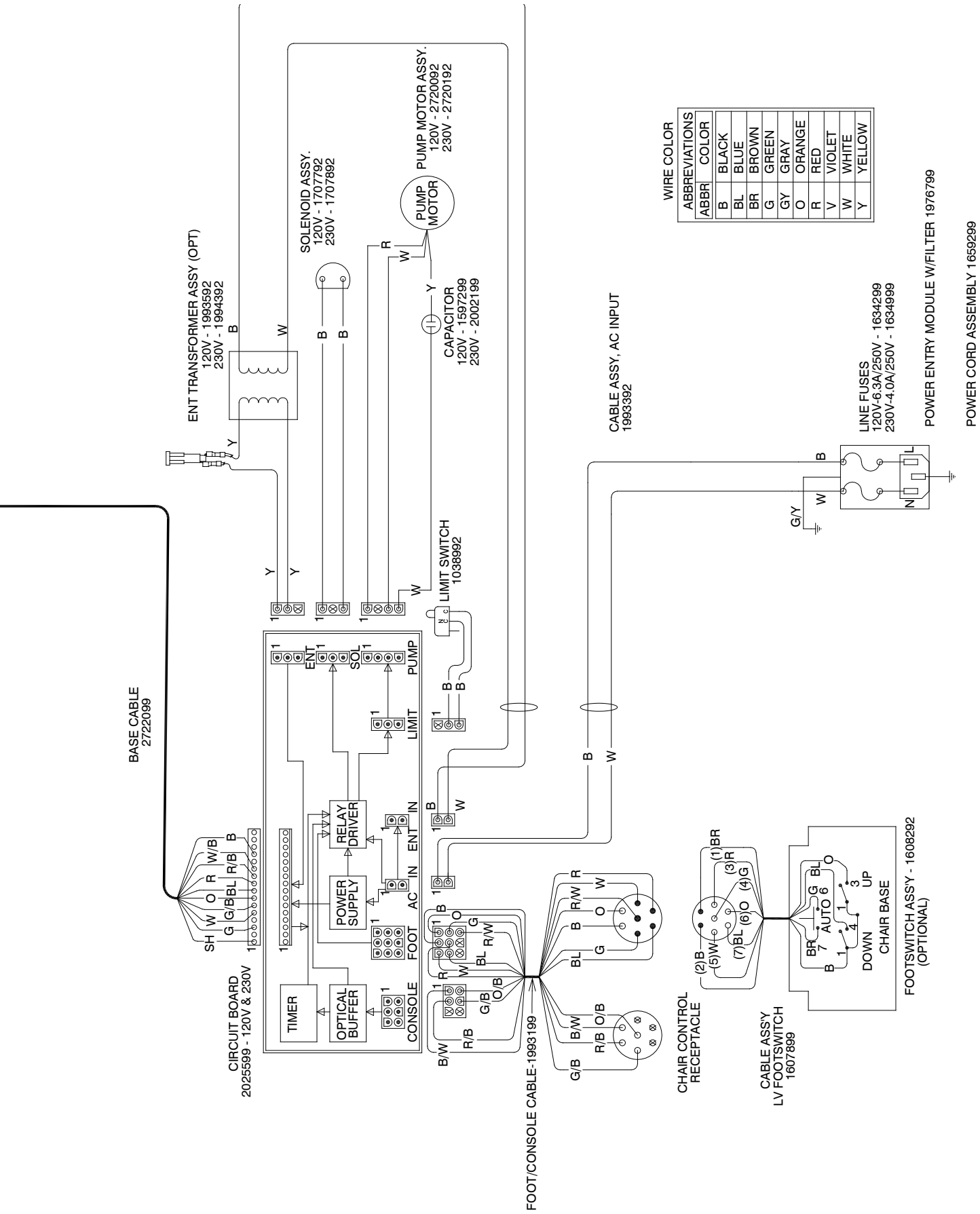
ENT TRANSFORMER ASSY (OPT)
120V - 1993592
230V - 1994392
SOLENOID ASSY.
120V - 1707792
230V - 1707892
PUMP MOTOR ASSY.
120V - 2720092
230V - 2720192
PUMP MOTOR
CAPACITOR
120V - 1597299
230V - 2002199
LIMIT SWITCH
1038992
CABLE ASSY, AC INPUT
1993392
LINE FUSES
120V-6.3A/250V - 1634299
230V-4.0A/250V - 1634999
POWER ENTRY MODULE W/FILTER 1976799
POWER CORD ASSEMBLY 1659299
WIRE COLOR
ABBREVIATIONS
ABBR COLOR
B BLACK
BL BLUE
BR BROWN
G GREEN
GY GRAY
O ORANGE
R RED
V VIOLET
W WHITE
Y YELLOW
BASE CABLE
2722099
CIRCUIT BOARD
2025599 - 120V & 230V
TIMER
OPTICAL BUFFER
POWER SUPPLY
RELAY DRIVER
CONSOLE
FOOT
AC IN
ENT IN
LIMIT
ENT
SOL
PUMP
FOOT/CONSOLE CABLE-1993199
CHAIR CONTROL RECEPTACLE
CABLE ASS'Y
LV FOOTSWITCH
1607899
FOOTSWITCH ASS'Y - 1608292
(OPTIONAL)
DOWN
UP
AUTO 6
CHAIR BASE

(NOTES)

LIMITED WARRANTY

The Reliance® product must be used only for the purposes and in the manner described in the literature distributed with the product. The products are warranted against defective materials and workmanship for the period set forth in the warranty provided with each product. Products or parts thereof will be repaired or replaced as required at Reliance® Medical Products, Inc. Such repair or replacement shall be the sole remedy under this warranty. This warranty extends only to the original purchaser from an authorized Reliance® dealer and is subject to the following conditions:

1. The warranty card must be completed and returned to Reliance® Medical Products, Inc. within two(2) weeks from the date of installation.

2. Installation and servicing of the products must be performed by trained Reliance® equipment dealer service personnel in accordance with the appropriate instructions manual for the products.

3. The products have not sustained breakage or other type damage due to accident or misuse.

4. This warranty will not apply to Reliance® products which have had the serial number removed, altered or effaced.

EXCEPT FOR THE EXPRESS WARRANTY SET FORTH ABOVE, RELIANCE® DOES NOT GRANT ANY WARRANTIES, EITHER EXPRESS OR IMPLIED, INCLUDING IMPLIED WARRANTIES OF MERCHANTABILTY OR FITNESS FOR A PARTICULAR USE.

Reliance® Medical Products neither assumes nor authorizes any person to assume for it, any other liability in connection with the sale and use of its products.

REMEDIES ARE LIMITED EXCLUSIVELY TO REPAIR OR REPLACEMENT OF PARTS. RELIANCE® MEDICAL PRODUCTS, INC. EXPRESSLY DISCLAIMS LIABILITY FOR INCIDENTAL OR CONSEQUENTIAL DAMAGE RESULTING FROM THE USE OF THE EQUIPMENT.

Claims covered by this warranty will be honored when presented within one (1) month from discovery of a defect.

3535 Kings Mills Road
Mason, Ohio 45040-2303
1-800-735-0357(Customer Service)
1-800-735-0358 (Technical Service)
(513) 398-3937
Http://www.reliance-medical.com

P/N 27168 REV E

© Copyright 2006
Printed in U.S.A.
Revised 02-2012-7925